MY 2005.5 GBR en

www.fordvans.co.uk/panelvans

Ford Panel Vans

Backbone of Britain

Specification
April 2005

Dealer stamp

Published by Commercial Vehicle Marketing,
Ford Motor Company Limited,
Brentwood, Essex, England.
Registered in England No. 235446.
April 2005
© Ford Motor Company Limited.

Illustrations, descriptions and specifications. This catalogue was correct at the time of going to print. However, Ford policy is one of continuous product development. The right is reserved to change specifications, colours and prices of the models and items illustrated and described in this publication at any time. For the latest details always consult your Ford Transit Specialist Dealer. **Optional equipment**. Throughout this publication, wherever a feature is described as being an 'Option' or 'Optional Fitment/Pack', etc., you should assume that it will be at extra cost to the base vehicle, unless specifically stated to the contrary. All models and colour combinations are subject to availability.

Ford**CommercialVehicles**
Backbone of Britain

Ford**FiestaVan**

Highlights

- Class-leading 1.32 m load length
- 526 kg gross payload (petrol), 558 kg (diesel)
- 1.013 cu.m loadspace*
- 9.8 m turning circle, tightest in class
- Anti-lock brakes fitted as standard
- Driver and passenger airbags as standard♦
- Half-height, full-width bulkhead
- Choice of petrol or diesel engines

♦Note: A rear-facing child seat should never be placed in the front passenger seat when the Ford vehicle is equipped with an operational front passenger's airbag.

When time is short and the job just has to get done, there's only one name to trust – the Ford Fiesta Van. Tough, yet thoroughly stylish, it's the perfect answer to your business transport needs.

What's more, you'll find that the Ford Fiesta Van is engineered to the same high standards as the rest of the Ford Panel Van range. So you can be sure it will deliver solid, dependable performance for years to come.

*Measured using the VDA method.

Model Fiesta Van.
Vehicle shown features optional equipment, at extra cost.

Fiesta Van

Dimensions (mm)
A 3917
B 1905/1683
C 1467
E 2487
I 980
K 1366
M 835/957
O 1320
P 647
T 1345
U 995
V 1058
W 1.013 (cu.m)*

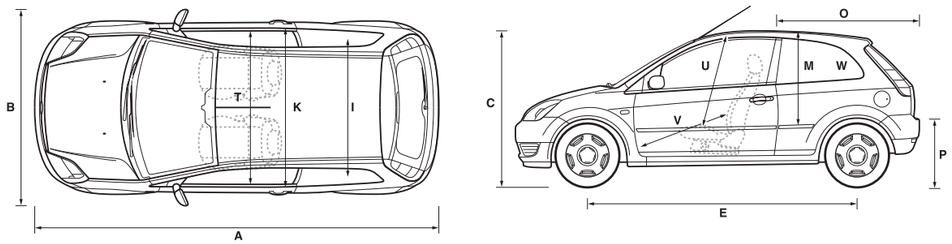

Fiesta Van
A Overall length
B Overall width (with/without mirrors)
C Overall height (kerb ground)
E Wheelbase
I Load width between wheel arches
K Maximum interior load width
M Loadspace height/max height
O Loadspace length
P Loading height
T Shoulder room
U Effective headroom
V Maximum effective leg room
W Loadspace

*Measured using the VDA method. This is the method used by the Verbund die Automobil Industrie (VDA) in Germany. A VDA figure is determined by filling the loadspace with 'litre' blocks, each measuring 200x100x50 mm. The blocks are then counted, and the numerical result is converted into cubic metres. **Note:** All dimensions (shown in mm) are subject to manufacturing tolerances and refer to minimum specification models and do not include additional equipment. These illustrations are for guidance only.

Model availability, weights and loads

	Payload (gross) (kg)	**Gross vehicle mass** (kg)	**Kerb mass** (kg)
Ford Fiesta Van			
1.3 Duratec (70 PS) petrol	526	1540	1014
1.4 Duratorq TDCi (68 PS) diesel	558	1585	1027

Note: All vehicles are 5-speed manual. **Payload** = Gross vehicle mass, less kerb mass. **Gross vehicle mass** = The total permissible all-up weight of a rigid vehicle – i.e. with body, payload, ancillaries, fuel, oil, water and driver. **Kerb Mass** = The weight of the complete vehicle and all equipment including fuel and water, but without the payload and driver. All kerb masses quoted are subject to manufacturing tolerances and are for vehicles with minimum equipment.

Engine data

	Engine technical features	**Maximum power**[o]	**Maximum torque**[o]
1.3 Duratec Petrol 1299 cc	4 cylinders in line; SOHC; 8 valves; electronic multipoint fuel injection	51 kW (70 PS) at 5600 min^{-1} (rpm)	106 Nm at 2800 min^{-1} (rpm)
1.4 Duratorq TDCi Diesel 1399 cc	4 cylinders in line; SOHC; 8 valves; alloy cylinder head and block; direct injection with high pressure, common-rail, multipoint fuel injection system; turbocharger; electronic throttle	50 kW (68 PS) at 4000 min^{-1} (rpm)	160 Nm at 2000 min^{-1} (rpm)

[o]Tested in accordance with ISO 1585.

Mechanical features

	Fiesta Van
Brakes	
Diagonally-split, with dual-line servo-assistance. Front discs, rear drums	●
Anti-lock brakes	●
Fuel tank	
Usable capacity – Petrol – 45 litres, Diesel – 43 litres	●
Steering	
Rack-and-pinion	●
Power-assisted	●
Steering column – Tilt-adjustable	●
Suspension and body	
Front – Independent with MacPherson struts, and subframe-mounted 'L' arm. Anti-roll bar	●
Rear – Twist-beam with coil springs	●
Turning circle	
Kerb to kerb – 9.8 m	●

● = Standard

Safety and security

	Fiesta Van
Safety	
Anti-lock brakes	●
Fuel cut-off – Inertia switch (petrol only)	●
Side impact door beams, front and rear. Steel safety cage with engine compartment cross beam. Energy absorbing crumple zones, front and rear	●
Steering column – Additional bracing	●
Locks – Anti-burst	●
Seat belts – Front, inertia reel, with grabbers, pre-tensioners and height-adjustable mounts	●
Airbags – Driver's	●
Airbags – Front passenger's*[o]	●
Airbags – Front side impact airbags*	○
Security	
Alarm – Perimeter	○
Fuel cap – Locking with body colour flap	●
Immobiliser – 'Safeguard' Passive Anti-Theft System	●
Locks – High security, shielded with strengthened mountings	●
Locks – Remote central/double locking	●
Vehicle Identification Number (VIN) – Visible	●

● = Standard, ○ = Option, at extra cost.
***Note: A child seat should never be placed in the front passenger seat when the Ford vehicle is equipped with an operational front passenger's airbag.**
[o]A front passenger airbag deactivation switch is available as a Dealer-fitted accessory.

Exterior features

	Fiesta Van
Styling	
Bodyside mouldings – Self colour	●
Bumpers – Body colour upper with self colour lower	●
Paint – Metallic	○
Functional	
Door mirrors – Manual internal control, black housings	●
Door mirrors – Electrically-operated and heated, black housings (part of Convenience Pack)	□
Heated rear window	●
Heated windscreen	○
Tinted glass	●
Wheel arch liners – Front and rear	●
Wheels – 5½x14" steel (full-size spare) with full wheelcovers and 175/65 R14 Low Rolling Resistance (LRR) tyres	●
Wheels – 14" 9-spoke alloy wheels (full-size steel spare) and 175/65 R14 Low Rolling Resistance (LRR) tyres	○
Wipers – Front, 2-speed, with programmable interval intermittent wipe and electric wash	●
Wipers – Front, delayed wipe after wash/wipe function	●
Wipers – Tailgate wiper, intermittent with electric wash	●
Wheels – Tailgate, reverse gear activation (when front wipers are in use)	●
Lights	
Halogen headlights, side lights, rear fog light, reversing light	●
Headlight levelling	●
High-mounted rear brake light	●
Front fog lights	○

● = Standard, ○ = Option, at extra cost, □ = Part of an option pack, at extra cost.

Interior features

	Fiesta Van
Audio	
Stereo AM/FM radio/cassette – Model 2500, 'Keycode' anti-theft coding, 2 speakers	●
Stereo AM/FM radio/CD – Model 4500 RDS EON, 'Keycode' anti-theft coding, 2 speakers	○
Comfort and convenience	
Accessory socket	●
Air conditioning – CFC-free with air recirculation	○
Centre console – Long with cup holder	●
Clock – Digital, 12- or 24-hour function	●
Glovebox with lid incorporating pen, cup and ticket holders	●
Mirror – Dipping rear-view	●
Sunvisor – Driver's with covered mirror and ticket strap	●
Sunvisor – Passenger's with covered mirror	●
Windows – Front, electrically-operated (part of Convenience Pack)	□
Seats and seat belts	
Front seat – Driver's seat manual height adjustment	●
Front seats – Anti-submarining, with height adjustable head restraints	●
Carpet and trim	
Carpet – Non-woven velour	●
Door trim – Fabric insert, moulded panel with pull handle/armrest, front door bins and integrated speaker grilles	●
Instrument cluster, radio and heater control surrounds – Ebony and Black colour finish	●
Instruments and controls	
Instruments – Speedometer, electronic digital engine temperature and fuel level gauges, tachometer and trip recorder	●
Warning indicators for oil pressure, direction indicators, glow plugs (diesel only), high beam, ignition/alternator, brake failure, handbrake on, airbag(s), low fuel level, 'lights on' audible warning	●
Illuminated heater controls – 4-speed fan. Four vents with temperature and direction control	●
Control stalks – Column-mounted for indicators and wash/wipe functions	●
Lighting	
Courtesy light – Header-mounted, front door and tailgate-operated	●
Load compartment light	●
Load compartment	
Bulkhead – Half-height horizontal	●
Bulkhead – Mesh upper	○
Load tie-down eyes, four	●
Rear screen mesh	○

● = Standard, ○ = Option, at extra cost, □ = Part of an option pack, at extra cost.

Option packs

	Fiesta Van
Convenience Pack – Electrically-operated and heated door mirrors, electrically-operated front windows	○
Smoker's Pack – Front ashtray and cigar lighter	○

○ = Option, at extra cost

Special Vehicle Options

	Fiesta Van
SVO paint	○

○ = Option, at extra cost

Ford**TransitConnect**

Highlights

- From 1760 to 2714 mm load length (at floor level)
- From 625 kg to 900 kg gross payload
- From 2.8 cu.m to 4.4 cu.m loadspace*
- Fold flat passenger seat for improved load carrying capability
- Choice of three equipment levels: Van, L and LX on SWB
- Choice of two equipment levels: L and LX on LWB
- Anti-lock brakes (ABS) fitted as standard on L and LX models
- 3-year / 100,000-mile warranty
- LPG / petrol bi-fuel engine option

The Transit Connect Van range is an exciting, new generation of compact vans designed and engineered specifically for commercial use. What's more, it is built to the same exacting standards as the award-winning Ford Transit range to bring you unparalleled levels of durability, reliability and strength.

Model Transit Connect Van LWB.
Vehicle shown features optional equipment, at extra cost.

*Measured using the VDA method.

Transit Connect SWB Low Roof Van

Dimensions (mm)
A 4278
B 2044
B 1795
C 1739/1814
D 864
E 2664
F 749
G 609
H 1293
I 1226
J 1145
K 1490
L 1028
M 1193
N 2467
O 1583
O 1739
O 1760
P 496/598
Q 1505
R 1552
S 166
W 2.8 (cu.m)‡
W 3.4 (cu.m)‡

Additional information

Interior – Front	(mm)
Effective headroom	1147
Maximum effective leg room	1008
Shoulder room	1382
Hip room	1284

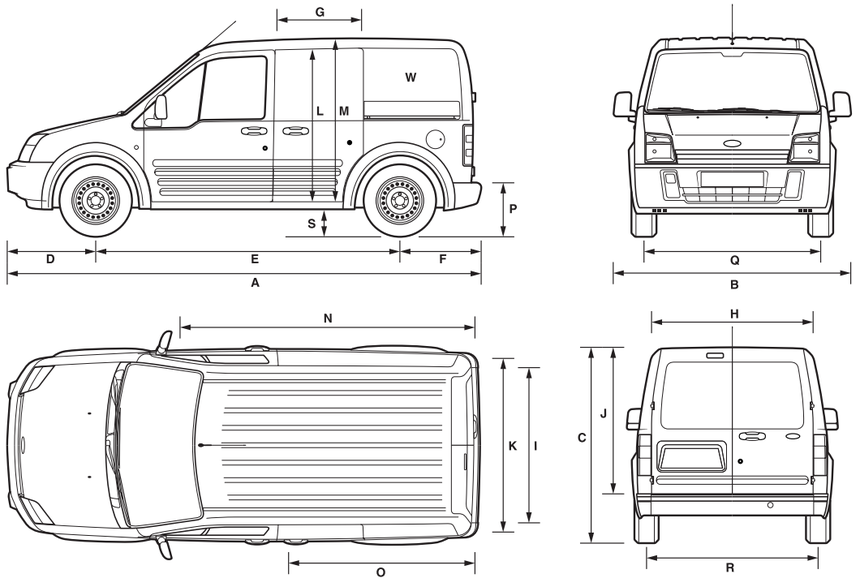

Transit Connect LWB High Roof Van

Dimensions (mm)
A 4525
B 2044
B 1795
C 1906/1981
D 864
E 2912
F 749
G 819
H 1293
I 1226
J 1316
K 1492
L 1184
M 1364
N 2714
O 1830
O 1986
O 2007
P 496/601
Q 1505
R 1552
S 166
W 3.7 (cu.m)‡
W 4.4 (cu.m)‡

Additional information

Interior – Front	(mm)
Effective headroom	1304
Maximum effective leg room	1008
Shoulder room	1382
Hip room	1284

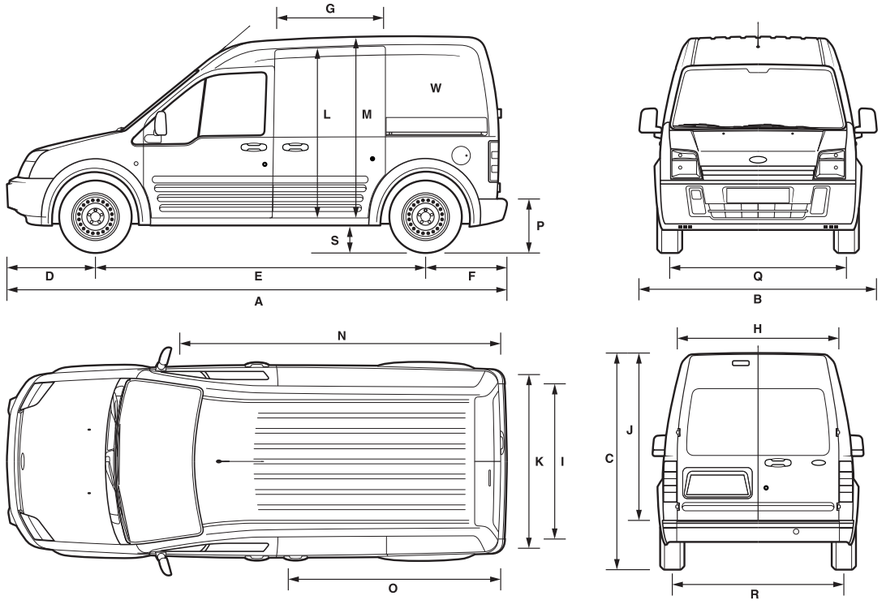

All Vans

A Overall length
B Overall width
B Overall width
C Overall height
D Front overhang
E Wheelbase
F Rear overhang
G Side door entry
H Rear door opening width below belt
I Load width between wheel arches
J Rear door opening height
K Load width
L Side opening height*
M Load floor to roof
N Load length (max) (passenger's seat folded)
O Load length (laden to belt line)
O Load length (back of front seat)
O Load length (passenger's fold-flat seat up)
P Loading height (laden/unladen)
Q Front track
R Rear track
S Ground clearance
W Loadspace
W Loadspace (passenger seat folded)

*For side door availability, please see page 13.

Key: All dimensions (shown in mm) are subject to manufacturing tolerances and refer to minimum specification models and do not include additional equipment. Dimensions may vary dependent on the model and equipment fitted. ‡Measured using the VDA method. All dimensional figures and cargo volumes may be affected by the fitment of bulkheads. You should always discuss final details with your Ford Transit Specialist Dealer.

Model availability

	SWB Van	L	LX	LWB L	LX
Transit Connect					
1.8 Duratec (115 PS) petrol		●	●	●	
1.8 Duratec (115 PS) petrol/LPG bi-fuel		●	●	●	
1.8 Duratorq TDdi (75 PS) diesel	●	●	●	●	
1.8 Duratorq TDCi (90 PS) diesel		●	●	●	●

● = Standard.

Weights and loads

	Payload (Gross) (kg)º	**Gross vehicle mass** (kg)	**Kerb mass** (kg)	**Axle ratio**	**Max. GTM** (kg) with quoted axle ratio
T200 SWB Low Roof Van					
1.8 Duratorq TDdi (75 PS) diesel	625	2025	1400	4.06	2825
T200 SWB L Low Roof Van					
1.8 Duratorq TDdi (75 PS) diesel	625	2025	1400	4.06	2825
1.8 Duratorq TDCi (90 PS) diesel	625	2035	1410	4.06	2835
1.8 Duratec (115 PS) petrol	625	1970	1345	4.06	2770
1.8 Duratec (115 PS) petrol/LPG bi-fuel	557	1970	1413	4.06	2770
T200 SWB LX Low Roof Van					
1.8 Duratorq TDdi (75 PS) diesel	625	2025	1400	4.06	2825
1.8 Duratec (115 PS) petrol	625	1970	1345	4.06	2770
1.8 Duratec (115 PS) petrol/LPG bi-fuel	557	1970	1413	4.06	2770
T220 SWB L Low Roof Van					
1.8 Duratorq TDdi (75 PS) diesel	825	2230	1405	4.06	3030
1.8 Duratorq TDCi (90 PS) diesel	825	2240	1415	4.06	3040
T220 SWB LX Low Roof Van					
1.8 Duratorq TDCi (90 PS) diesel	825	2240	1415	4.06	3040
T210 LWB L High Roof Van					
1.8 Duratec (115 PS) petrol	700	2080	1380	4.06	2880
1.8 Duratec (115 PS) petrol/LPG bi-fuel	632	2080	1448	4.06	2880
T220 LWB L High Roof Van					
1.8 Duratorq TDdi (75 PS) diesel	825	2260	1435	4.06	3060
T230 LWB L High Roof Van					
1.8 Duratorq TDCi (90 PS) diesel	900	2340	1440	4.06	3140
T230 LWB LX High Roof Van					
1.8 Duratorq TDCi (90 PS) diesel	900	2340	1440	4.06	3140

*Maximum 12% gradability. º**Payload** = Gross vehicle mass, less kerb mass. **Kerb mass** = The weight of the complete vehicle and all equipment including fuel and water, but without payload, driver or any crew. **Plated mass** = The maximum weight allowed to be imposed on the axle (GVM must not be exceeded). **GTM** = Gross train mass. The total permissible all-up weight of a rigid vehicle (see GVM) together with its load. All kerb masses quoted in this brochure are subject to manufacturing tolerances and are for vehicles with minimum equipment, the additional weight of any options or accessories should be taken into account when calculating the final payload of the vehicle.

Engine data

	Engine technical features	**Maximum power**º	**Maximum torque**º
1.8 Duratorq TDdi Diesel 1753 cc	4 cylinders in line; SOHC; 8 valves; direct injection with multipoint fuel injection system; electronic throttle	55 kW (75 PS) at 4000 min^{-1} (rpm)	175 Nm at 1800 min^{-1} (rpm)
1.8 Duratorq TDCi Diesel 1753 cc	4 cylinders in line; SOHC; 8 valves; direct injection with high-pressure, common-rail, multipoint fuel injection system; variable nozzle turbocharger with intercooler and transient torque overboost function; electronic throttle; dual-mass flywheel	66 kW (90 PS) at 4000 min^{-1} (rpm)	220 Nm at 1750 min^{-1} (rpm)
1.8 Duratec Petrol 1796 cc	4 cylinders in line; DOHC; 16 valves; alloy cylinder head; electronic multipoint fuel injection	86 kW (115 PS) at 5750 min^{-1} (rpm)	160 Nm at 4400 min^{-1} (rpm)
1.8 Duratec Petrol/LPG Bi-fuel 1796 cc	4 cylinders in line; DOHC; 16 valves; alloy cylinder head; electronic multipoint fuel injection; electronic gas injection; fuel vaporiser/pressure regulator, dedicated ECU	86 kW (115 PS) at 5750 min^{-1} (rpm)	160 Nm at 4400 min^{-1} (rpm)

ºTested in accordance with ISO 1585.

Mechanical features

	SWB Van	L	LX	LWB L	LX
Brakes					
Diagonally-split, with dual-line servo-assistance. Front discs, rear drums	●	●	●	●	●
Anti-lock brakes (includes electronic brake-force distribution)	○	●	●	●	●
Anti-lock brakes (includes electronic brake-force distribution) with Traction Assist and rear discs	○	○	○	○	○
Fuel tank					
Capacity – 60 litres (plus 59 litres on LPG/Bi-fuel vehicles)**	●	●	●	●	●
Steering					
Power-assisted	●	●	●	●	●
Suspension and body					
Front – Independent with MacPherson struts, variable-rate coil springs, gas-pressurised shock absorbers, and anti-roll bar	●	●	●	●	●
Rear – Single leaf springs and gas-pressurised shock absorbers (T200 models only)	●	●	●		
Rear – Multi-leaf springs, gas-pressurised shock absorbers, and anti-roll bar		●	●	●	●
Side impact door beams, front. Collapsible steering column. Energy absorbing crumple zones, front and rear	●	●	●	●	●
Towing eyes – Front and rear	●	●	●	●	●
Turning circle					
Kerb to kerb – 11.0 m	●	●	●		
Kerb to kerb – 11.9 m				●	●

● = Standard, ○ = Option, at extra cost.
**Due to natural expansion of LPG, the usable capacity is 47 litres.

Safety and security features

	SWB Van	L	LX	LWB L	LX
Safety					
Airbag – Driver's	●	●	●	●	●
Airbag – Front passenger's*	○	○	○	○	○
Airbags – Front side impact (not available with fold-flat passenger's seat)*		○	○	○	○
Security					
Alarm – Perimeter		○	○	○	○
Immobiliser – Passive Anti-Theft System (PATS)	●	●	●	●	●
Locks – High-security, lock-in-latch system, shielded with strengthened mountings	●	●	●	●	●
Locks – Remote keyless entry with rolling codes		●	●	●	●
Locks – Central/double locking	●	●	●	●	●
Locks – Key-operated bonnet release	●	●	●	●	●
Fuel cap – Locking with body colour flap	●	●	●	●	●
Vehicle Identification Number (VIN) – Visible	●	●	●	●	●

● = Standard, ○ = Option, at extra cost.
***Note: A rear-facing child seat should never be placed in the front passenger seat when the Ford vehicle is equipped with front passenger's or side airbags.**

Exterior features

	SWB Van	L	LX	LWB L	LX
Exterior appearance and styling					
Bodyside mouldings – One-piece, self colour		●	●	●	●
Bumpers – Self colour	●	●	●	●	●
Paint – Metallic	○	○	○	○	○
Wheel-lip mouldings – Self colour	●	●	●	●	●
Exterior functional					
Door mirrors – Manual, flat folding, black housings	●	●		●	
Door mirrors – Electrically-operated and heated, black housings°		□	●	□	●
Door mirrors – Enhanced rear vision	●	●	●	●	●
Doors – Tailgate, glazed	○	○	○		
Doors – Hinged rear doors, unglazed	●	●	●	●	●
Doors – Hinged rear doors, glazed	○	○	○	○	○
Doors – Passenger side sliding load door, unglazed	○	○	○	●	●
Doors – Passenger side sliding load door, glazed	○	○	○	○	○
Doors – Passenger side sliding load door, delete				○	○
Doors – Driver and passenger side sliding load doors, unglazed	○	○	○	○	○
Doors – Driver and passenger side sliding load doors, driver side unglazed, passenger side glazed	○	○	○	○	○
Doors – Driver and passenger side sliding load doors, glazed	○	○	○	○	○
Heated rear window(s)‡	□	□	□	□	□
Parking distance sensor – Rear		○	○	○	○
Roof flap		○	○		
Roof height – Low	●	●	●		
Roof height – High				●	●
Tinted glass – Front door windows and windscreen only	●	●	●	●	●
Towing eyes – Front and rear	●	●	●	●	●
Windscreen – Laminated	●	●	●	●	●
Windscreen – 'Quickclear' heated front (includes heated washer jets)°		□	●	□	●
Wipers – Front, 2-speed, with intermittent wipe and electric wash	●	●	●	●	●
Wiper(s) – Rear, with fixed intermittent wipe and electric wash‡	□	□	□	□	□
Exterior lighting					
Halogen headlights, side lights, rear fog light, reversing light	●	●	●	●	●
High-mounted rear brake light	●	●	●	●	●
Fog lights – Front		○	●	○	●

● = Standard, ○ = Option, at extra cost, □ = Part of an option pack, at extra cost.
Winter Pack – Electrically-operated and heated door mirrors, 'Quickclear' heated front windscreen (includes heated washer jets).
Rear Visual Pack – Rear wiper(s) with fixed intermittent wipe and electric wash, heated rear window(s).

Interior features

	SWB Van	L	LX	LWB L	LX
Audio					
Stereo AM/FM radio/cassette – Model 4000N RDS EON, 'Keycode' anti-theft coding, 2 speakers	●	●		●	
Stereo AM/FM radio/CD – Model 6000N RDS EON, 'Keycode' anti-theft coding, 2 speakers		□	●	□	●
Stereo AM/FM radio/CD – Model 6006E RDS EON, with 6-disc in-dash CD autochanger, 'Keycode' anti-theft coding, 2 speakers*		□	○	□	○
Steering column-mounted remote audio controls[00]*		□	●	□	●
Carpet and trim					
Rubber floor mat	●	●	●	●	●
Door trim – Moulded panel with pull handles and, on front doors only, door bins	●	●	●	●	●
Gear lever gaiter – Black	●	●	●	●	●
Gear knob – Black with acrylic insert	●	●	●	●	●
Interior lighting					
Courtesy light – Header-mounted, front door-operated	●	●		●	
Map reading light in lieu of courtesy light			●		●
Load compartment light – One, roof-mounted	●	●	●	●	●
Instruments and controls					
Control stalks – Column-mounted for master lights, indicators and wash/wipe functions	●	●	●	●	●
Illuminated heater controls – 4-speed fan. Four vents with temperature and direction control	●	●	●	●	●
Instruments – Speedometer, engine temperature, fuel level gauges, tachometer and trip recorder	●	●	●	●	●
Warning indicators for oil pressure, direction indicators, glow plugs (diesel only), main beam, ignition/alternator, brake failure, handbrake on, airbag(s), low fuel level, 'lights on' audible warning, ABS, traction control, check engine	●	●	●	●	●
Steering column – Rake/reach-adjustable	●	●	●	●	●
Seats and seat belts					
Front seat – Driver's 4-way manual adjustment	●	●		●	
Front seat – Driver's 6-way manual adjustment		○	●	○	●
Front seat – Passenger's fold-flat seat for loadbox extension	●	●	●	●	●
Front seat – Passenger's 4-way manual adjustment (includes under seat storage)	●+	●+	●+	●+	●+
Front seat – Driver's armrest and adjustable lumbar support		○	●	○	●
Front seats – Anti-submarining, fully reclining with height-adjustable head restraints	●	●	●	●	●
Storage pocket – Front passenger's seat back (not available on fold-flat seat)	●	●	●	●	●
Seat trim – Fabric	●	●	●	●	●
Seat trim – Prima grain vinyl		○		○	
Seat belts – Front, inertia reel, with grabbers, static buckle and roto pre-tensioner (driver's seat only) and height-adjustable mounts	●	●	●	●	●
Comfort and convenience					
Accessory socket	●	●	●	●	●
Air conditioning – CFC-free with air recirculation		○	○	○	○
Centre console – Includes coin tray, pen holder and two cup holders	●	●	●	●	●
Clock – Digital	●	●	●	●	●
Glovebox	●	●	●	●	●
Heater – Recirculation	●	●	●	●	●
Mirror – Dipping rear-view (not available on unglazed rear doors)	●	●	●	●	●
Smokers' Pack – Cigar lighter and ashtray	○	○	○	○	○
Storage – Centre facia-mounted clipboard holder	●	●	●	●	●
Storage – Overhead full-width shelf		○	○	●	●
Storage – Under passenger's seat, (included with 4-way manual adjustment passenger seat)	●+	●+	●+	●+	●+
Sunvisor – Driver's with ticket strap	●	●	●	●	●
Sunvisor – Passenger's	●	●	●	●	●
Windows – Front, electrically-operated with 'one touch' lowering on driver's side		○	●	○	●

Interior features

	SWB Van	L	LX	LWB L	LX
Load compartment					
Bulkhead – Vertical 2-bar, steel	○	○	●	○	●
Bulkhead – Full-width steel, half-height	○	○	○	○	○
Bulkhead – Full-width, full-height mesh with folding facility (only available with fold-flat passenger seat)	○	○	○	○	○
Bulkhead – Full-width steel, full-height	○	○	○	○	○
Bulkhead – Full-width steel, full-height with window	○	○	○	○	○
Load liner – Floor	○	○	●	○	●
Storage – Door stowage bin and net (not available with tailgate)		●	●	●	●
Tie-down rings – Four		●	●	●	●

● = Standard, ○ = Option, at extra cost, □ = Part of an option pack, at extra cost, ●+ = Option, at no cost.
*__Audio Upgrade Pack 14__ – Stereo AM/FM radio/CD, model 6006E RDS EON with 6-disc in-dash CD autochanger, 'Keycode' anti-theft coding, steering column-mounted remote audio controls. [00]__Audio Upgrade Pack 13__ – Stereo AM/FM radio/CD, model 6006N RDS EON, 'Keycode' anti-theft coding, steering column-mounted remote audio controls.

Special vehicle options

	SWB Van	L	LX	LWB L	LX
Tyres – Positive tyre selection (Goodyear, Pirelli or Bridgestone) (A)		○	○	○	○
Tyres – Mud and snow tyres (Goodyear Ultragrip 6) (B)		○	○	○	○
Tyres – All-weather tyres (Goodyear Vector 5)		○	○	○	○
Attitude/ride height pack (Hi-Payload Vans) (not available on T200/210 models)		○	○	○	○
250° rear cargo doors	○	○	○	○	○
Unglazed tailgate	○	○	○		
SVO paint package	○	○	○	○	○

○ = Option, at extra cost. (A) Available only on 200 models. (B) Tyres specially selected for use in mud and snow conditions. They give good traction in hard-packed snow, especially when moving from standstill.

Wheel availability

	SWB Van	L	LX	LWB L	LX
Wheels – 6x15" steel with centre cap (full-size spare) and 195/65 R15 tyres	●	●		●	
Wheels – 6x15" steel with partial wheelcover (full-size spare) and 195/65 R15 tyres			●		●
Wheels – 15" 5-spoke alloy wheels with locking wheel nuts (full-size steel spare) and 195/65 R15 tyres		○	○	○	○
Wheels – Inflation kit in lieu of spare wheel (LPG models only)		●	●	●	

● = Standard, ○ = Option, at extra cost.

Model Transit Van LWB.
Vehicle shown features optional equipment, at extra cost.

Ford**Transit** Van

Highlights

- Three wheelbases – short, medium and long – accommodating load lengths from 2.5 to more than 4 metres
- Three roof heights – low, medium and high, loadspace cube from 5.19 to 12.28 cu.m*
- Heavy-duty payloads for a gross vehicle mass of up to 4.25 tonnes on rear-wheel drive versions
- Front- or rear-wheel drive available on most models to meet specific business requirements
- Electronic anti-lock brakes (ABS) with electronic brake-force distribution fitted as standard across the range
- Engine range from 2.0-litre 85 PS / 230 Nm Di Turbo Diesel (standard on front-wheel drive models) to premium 2.4-litre TDCi common-rail Turbo Diesel 137 PS developing 375 Nm of torque, coupled with a new six-speed manual transmission

Remember 1965? We do. That was the year we transformed the image of the commercial vehicle by introducing the first Ford Transit. Back then we could not have imagined the impact this van would have on so many lives. From delivering goods and carrying people to supporting the emergency services, the Transit name has become a byword for reliability, durability and low cost of ownership. Its wide choice of body types, engines and payloads has provided the foundation for almost every business imaginable. And by continually adapting to meet the needs of the market, the Ford Transit remains an indispensable part of business life and the undisputed leader.

*Measured using the VDA method.

SWB Low Roof Van

Front-Wheel Drive
Dimensions (mm)
A 4834
B 2360/1974
C 1970-1974
D 904
E 2933
F 997
G 1030
H 1540
I 1390
J 1370
K 1762
L 1352
M 1430
N 2582
O 530 (unladen)
O 440 (laden)
P 6.55/5.62 (cu.m)

Rear-Wheel Drive
Dimensions (mm)
A 4834
B 2360/1974
C 1982-2033
D 904
E 2933
F 997
G 1030
H 1540
I 1390
J 1270
K 1762
L 1252
M 1330
N 2582
O 672 (unladen)
O 564 (laden)
P 6.05/5.19 (cu.m)

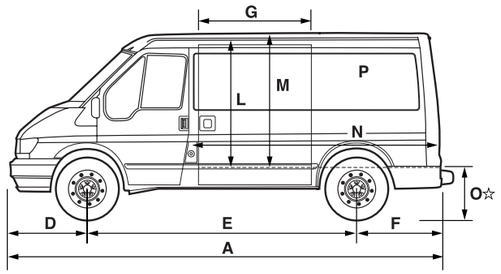

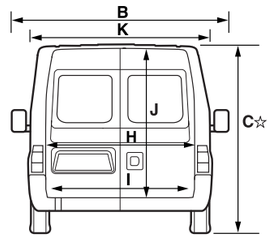

SWB Medium Roof Van

Front-Wheel Drive
Dimensions (mm)
A 4834
B 2360/1974
C 2232-2313
D 904
E 2933
F 997
G 1030
H 1540
I 1390
J 1666
K 1762
L 1352
M 1745
N 2582
O 518 (unladen)
O 440 (laden)
P 7.94/6.81 (cu.m)

Rear-Wheel Drive
Dimensions (mm)
A 4834
B 2360/1974
C 2328-2360
D 904
E 2933
F 997
G 1030
H 1540
I 1390
J 1566
K 1762
L 1252
M 1645
N 2582
O 672 (unladen)
O 564 (laden)
P 7.48/6.42 (cu.m)

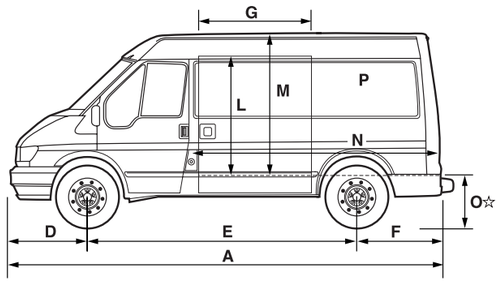

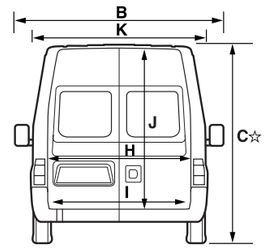

All Vans
A Overall length (excluding step where fitted)
B Overall width (with/without mirrors)
C Unladen height
D Front of vehicle to front wheel centre
E Wheelbase
F Rear of vehicle to rear wheel centre
G Side door entry width
H Rear door entry width
I Loadspace between wheel arches
J Rear door entry height
K Maximum loadspace width
L Side load door entry height
M Load floor to roof
N Maximum loadspace length
O Loading height
P Loadspace

Key: All dimensions (shown in mm) are subject to manufacturing tolerances and refer to minimum specification models and do not include additional equipment. ☆Height dimensions show the range from minimum to maximum of a fully laden, lowest payload vehicle to unladen highest payload vehicle.These illustrations are for guidance only. Loadspace shown as SAE/VDA and measured in cubic metres. **VDA method** This is the method used by the Verbund die Automobil Industrie (VDA) in Germany. A VDA figure is determined by filling the loadspace with 'litre' blocks, each measuring 200x100x50 mm. The blocks are then counted, and the numerical result is converted into cubic metres. **SAE method** The SAE (Society of Automotive Engineers) method simply measures the volume of a fine-grained material such as sand or rice which can be deposited into the loadspace. **Ford** favours the use of the more realistic VDA method of calculation for measuring 'usable' interior loadspace.

Weights and loads

	Payload (gross) (kg)	**Gross vehicle mass** (kg)	**Kerb mass** (kg)	**Front axle plated mass** (kg)	**Front axle kerb mass** (kg)	**Rear axle plated mass** (kg)	**Rear axle kerb mass** (kg)	**Axle ratio**	**Max. GTM** (kg) with quoted axle ratio
260 SWB Low Roof Van									
2.0 TD 85 PS/100 PS/125 PS	988	2600	1612	1400	1008	1400	604	4.23	3500
2.0 TD 85 PS/100 PS/125 PS	988	2600	1612	1400	1008	1400	604	4.54	3500
2.4 TD 90 PS with Durashift EST auto	850	2600	1750	1400	1015	1450	735	4.63	3500
2.3 Petrol 141 PS/LPG Bi-fuel	765	2600	1835	1400	1064	1450	771	5.13	3500
260 SWB Medium Roof Van (Optional model)									
2.0 TD 85 PS/100 PS/125 PS	961	2600	1639	1400	1021	1400	618	4.23	3500
2.0 TD 85 PS/100 PS/125 PS	961	2600	1639	1400	1021	1400	618	4.54	3500
2.4 TD 90 PS with Durashift EST	823	2600	1777	1400	1029	1450	748	4.63	3500
2.3 Petrol 141 PS/LPG Bi-fuel	738	2600	1862	1400	1080	1450	782	5.13	3500
280 SWB Low Roof Van									
2.0 TD 85 PS/100 PS/125 PS	1188	2800	1612	1400	1008	1550	604	4.23	3500
2.0 TD 85 PS/100 PS/125 PS	1188	2800	1612	1400	1008	1550	604	4.54	3500
2.4 TD 90 PS with Durashift EST auto	1050	2800	1750	1400	1015	1600	735	4.63	3500
2.3 Petrol 141 PS/LPG Bi-fuel	965	2800	1835	1400	1064	1600	771	5.13	3500
280 SWB Medium Roof Van (Optional model)									
2.0 TD 85 PS/100 PS/125 PS	1161	2800	1639	1400	1021	1550	618	4.23	3500
2.0 TD 85 PS/100 PS/125 PS	1161	2800	1639	1400	1021	1550	618	4.54	3500
2.4 TD 90 PS with Durashift EST auto	1023	2800	1777	1400	1029	1600	748	4.63	3500
2.3 Petrol 141 PS/LPG Bi-fuel	938	2800	1862	1400	1080	1600	782	5.13	3500
300 SWB Low Roof Van									
2.0 TD 85 PS/100 PS/125 PS	1388	3000	1612	1450	1008	1700	604	4.23	3500
2.0 TD 85 PS/100 PS/125 PS	1388	3000	1612	1450	1008	1700	604	4.54	3500
2.3 Petrol 145 PS*	1250	3000	1750	1450	1015	1750	735	5.13	5000
300 SWB Medium Roof Van (Optional model)									
2.0 TD 85 PS/100 PS/125 PS	1361	3000	1639	1450	1019	1700	620	4.23	3500
2.0 TD 85 PS/100 PS/125 PS	1361	3000	1639	1450	1019	1700	620	4.54	3500
2.3 Petrol 145 PS*	1223	3000	1777	1450	1030	1750	747	5.13	5000
330 SWB Low Roof Van									
2.0 TD 100 PS/125 PS	1601	3300	1699	1550	1064	2120	635	4.54	4500
2.4 TD 90 PS/115 PS	1558	3300	1742	1500	1014	2050	728	4.63	4500/5000
2.4 TD 90 PS/115 PS	1558	3300	1742	1500	1014	2050	728	5.13	5300
2.4 TD 125 PS with Durashift EST auto	1549	3300	1751	1500	1020	2050	731	4.63	4750
2.4 TD 125 PS with Durashift EST auto	1549	3300	1751	1500	1020	2050	731	5.13	5250
2.4 TDCi 137 PS	1543	3300	1757	1500	1024	2050	733	3.77	5300
2.3 Petrol 145 PS*	1558	3300	1742	1500	1014	2050	728	5.13	5300
330 SWB Medium Roof Van (Optional model)									
2.0 TD 100 PS/125 PS	1575	3300	1725	1550	1072	2120	653	4.54	4500
2.4 TD 90 PS/115 PS	1531	3300	1769	1500	1028	2050	741	4.63	4500/5000
2.4 TD 90 PS/115 PS	1531	3300	1769	1500	1028	2050	741	5.13	5300
2.4 TD 125 PS with Durashift EST auto	1522	3300	1778	1500	1034	2050	744	4.63	4750
2.4 TD 125 PS with Durashift EST auto	1522	3300	1778	1500	1034	2050	744	5.13	5250
2.4 TDCi 137 PS	1516	3300	1784	1500	1038	2050	746	3.77	5300
2.3 Petrol 145 PS*	1531	3300	1769	1500	1028	2050	741	5.13	5300

SWB = Short wheelbase. **Key: Payload** = Gross vehicle mass, less kerb mass. **GVM** = Gross vehicle mass. The total permissible all-up weight of a rigid vehicle - i.e. with body, payload, ancillaries, fuel, oil, water, driver and crew. **Kerb mass** = The weight of the complete vehicle and all equipment including fuel and water, but without payload, driver or any crew. **Plated mass** = The maximum weight allowed to be imposed on the axle (GVM must not be exceeded). **GTM** = Gross train mass. The total permissible all-up weight of a rigid vehicle (see GVM) together with its trailer and load. All kerb masses quoted in this brochure are subject to manufacturing tolerances and are for vehicles with minimum equipment. ***Please note** that where the LPG conversion is available as an option 85 kg must be added to the 2.3 petrol kerb mass and 85 kg DELETED from the payload. This calculation allows for the weight of the LPG tanks filled with 58 litres of LPG. Also the maximum permissible trailer weight for liquid alternative fuel vehicles is reduced by 15% in 'gas operation' mode.

MWB Medium Roof Van

Front-Wheel Drive
Dimensions (mm)
A 5201
B 2360/1974
C 2309
D 904
E 3300
F 997
G 1250
H 1540
I 1390
J 1666
K 1762
L 1565
M 1745
N 2949
O 555 (unladen)
O 440 (laden)
P 9.07/7.78 (cu.m)

Rear-Wheel Drive
Dimensions (mm)
A 5201
B 2360/1974
C 2314-2353
D 904
E 3300
F 997
G 1250
H 1540
I 1390
J 1566
K 1762
L 1465
M 1645
N 2949
O 667-672 (unladen)
O 567 (laden)
P 8.55/7.34 (cu.m)

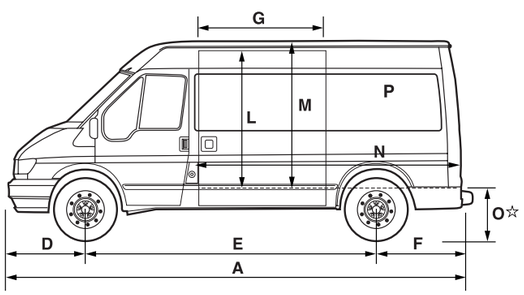

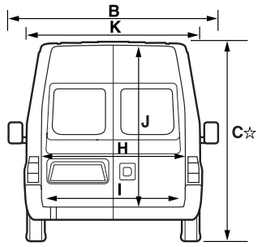

MWB High Roof Van

Front-Wheel Drive
Dimensions (mm)
A 5201
B 2360/1974
C 2529
D 904
E 3300
F 997
G 1250
H 1540
I 1390
J 1896
K 1762
L 1565
M 1985
N 2949
O 555 (unladen)
O 440 (laden)
P 10.31/8.85 (cu.m)

Rear-Wheel Drive
Dimensions (mm)
A 5201
B 2360/1974
C 2540-2573
D 904
E 3300
F 997
G 1250
H 1540
I 1390
J 1796
K 1762
L 1465
M 1885
N 2949
O 555 (unladen)
O 567 (laden)
P 9.79/8.40 (cu.m)

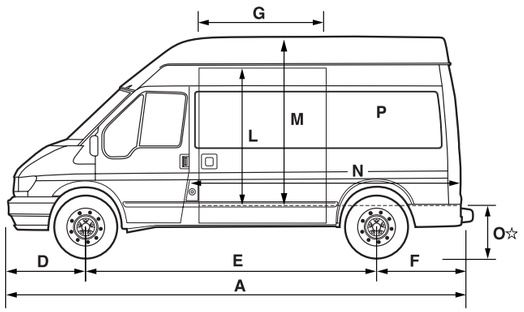

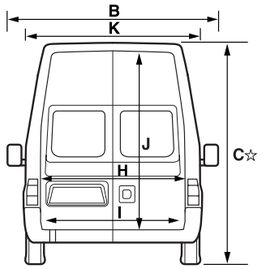

All Vans
A Overall length (excluding step where fitted)
B Overall width (with/without mirrors)
C Unladen height
D Front of vehicle to front wheel centre
E Wheelbase
F Rear of vehicle to rear wheel centre
G Side door width
H Rear door width
I Loadspace between wheel arches
J Rear door height
K Maximum loadspace width
L Side load door height
M Load floor to roof
N Maximum loadspace length
O Loading height
P Loadspace

Key: All dimensions (shown in mm) are subject to manufacturing tolerances and refer to minimum specification models and do not include additional equipment. ☆Height dimensions show the range from minimum to maximum of a fully laden, lowest payload vehicle to unladen highest payload vehicle. These illustrations are for guidance only. Loadspace shown as SAE/VDA and measured in cubic metres. **VDA method** This is the method used by the Verbund die Automobil Industrie (VDA) in Germany. A VDA figure is determined by filling the loadspace with 'litre' blocks, each measuring 200x100x50 mm. The blocks are then counted, and the numerical result is converted into cubic metres. **SAE method** The SAE (Society of Automotive Engineers) method simply measures the volume of a fine-grained material such as sand or rice which can be deposited into the loadspace. **Ford** favours the use of the more realistic VDA method of calculation for measuring 'usable' interior loadspace.

Weights and loads

	Payload (gross) (kg)	**Gross vehicle mass** (kg)	**Kerb mass** (kg)	**Front axle plated mass** (kg)	**Front axle kerb mass** (kg)	**Rear axle plated mass** (kg)	**Rear axle kerb mass** (kg)	**Axle ratio**	**Max. GTM** (kg) with quoted axle ratio
260 MWB Medium Roof Van									
2.0 TD 85 PS/100 PS/125 PS	907	2600	1693	1450	1043	1475	650	4.23	3500
2.0 TD 85 PS/100 PS/125 PS	907	2600	1693	1450	1043	1475	650	4.54	3500
260 MWB High Roof Van (Optional Model)									
2.0 TD 85 PS/100 PS/125 PS	889	2600	1711	1450	1054	1475	657	4.23	3500
2.0 TD 85 PS/100 PS/125 PS	889	2600	1711	1450	1054	1475	657	4.54	3500
280 MWB Medium Roof Van									
2.0 TD 85 PS/100 PS/125 PS	1107	2800	1693	1500	1043	1550	650	4.23	3500
2.0 TD 85 PS/100 PS/125 PS	1107	2800	1693	1500	1043	1550	650	4.54	3500
2.4 TD 90 PS with Durashift EST auto	969	2800	1831	1500	1038	1600	793	4.63	3500
2.3 Petrol 141 PS/LPG Bi-fuel	884	2800	1916	1500	1092	1600	824	5.13	3500
280 MWB High Roof Van (Optional model)									
2.0 TD 85 PS/100 PS/125 PS	1089	2800	1711	1500	1054	1550	657	4.23	3500
2.0 TD 85 PS/100 PS/125 PS	1089	2800	1711	1500	1054	1550	657	4.54	3500
2.4 TD 90 PS with Durashift EST auto	951	2800	1849	1500	1047	1600	802	4.63	3500
2.3 Petrol 141 PS/LPG Bi-fuel	866	2800	1934	1500	1102	1600	832	5.13	3500

Weights and loads

	Payload (gross) (kg)	**Gross vehicle mass** (kg)	**Kerb mass** (kg)	**Front axle plated mass** (kg)	**Front axle kerb mass** (kg)	**Rear axle plated mass** (kg)	**Rear axle kerb mass** (kg)	**Axle ratio**	**Max. GTM** (kg) with quoted axle ratio
300 MWB Medium Roof Van									
2.0 TD 85 PS/100 PS/125 PS	1307	3000	1693	1500	1043	1700	650	4.23	4000/4500/4500
2.0 TD 85 PS/100 PS/125 PS	1307	3000	1693	1500	1043	1700	650	4.54	4500
2.3 Petrol 145 PS*	1163	3000	1837	1500	1047	1800	790	5.13	5500
300 MWB High Roof Van (Optional model)									
2.0 TD 85 PS/100 PS/125 PS	1289	3000	1711	1500	1054	1700	657	4.23	4000/4500/4500
2.0 TD 85 PS/100 PS/125 PS	1289	3000	1711	1500	1054	1700	657	4.54	4500
2.3 Petrol 145 PS*	1140	3000	1860	1500	1060	1800	800	5.13	5500
330 MWB Medium Roof Van									
2.0 TD 100 PS/125 PS	1517	3300	1783	1665	1025	2120	640	4.54	4500
2.4 TD 90 PS/115 PS	1477	3300	1823	1550	1037	2050	786	4.63	4500/5000
2.4 TD 90 PS/115 PS	1477	3300	1823	1550	1037	2050	786	5.13	5750
2.4 TD 125 PS with Durashift EST auto	1468	3300	1832	1550	1043	2050	789	4.63	4750
2.4 TD 125 PS with Durashift EST auto	1468	3300	1832	1550	1043	2050	789	5.13	5250
2.4 TDCi 137 PS	1462	3300	1838	1550	1047	2050	791	3.77	5750
2.4 TDCi 137 PS	1462	3300	1838	1550	1047	2050	791	4.27	6000
2.3 Petrol 145 PS*	1477	3300	1823	1550	1037	2050	786	5.13	5500
330 MWB High Roof Van									
2.0 TD 100 PS/125 PS	1500	3300	1800	1665	1108	2120	692	4.54	4500
2.4 TD 90 PS/115 PS	1459	3300	1841	1550	1044	2050	797	4.63	4500/5000
2.4 TD 90 PS/115 PS	1459	3300	1841	1550	1044	2050	797	5.13	5750
2.4 TD 125 PS with Durashift EST auto	1450	3300	1850	1550	1050	2050	800	4.63	4750
2.4 TD 125 PS with Durashift EST auto	1450	3300	1850	1550	1050	2050	800	5.13	5250
2.4 TDCi 137 PS	1444	3300	1856	1550	1054	2050	802	3.77	5750
2.4 TDCi 137 PS	1444	3300	1856	1550	1054	2050	802	4.27	6000
2.3 Petrol 145 PS*	1459	3300	1841	1550	1044	2050	797	5.13	5500
350 MWB Medium Roof Van									
2.0 TD 100 PS/125 PS	1652	3500	1848	1665	1138	2250	710	4.54	4500
2.4 TD 90 PS/115 PS	1602	3500	1898	1600	1078	2250	820	4.63	4500/5000
2.4 TD 90 PS/115 PS	1602	3500	1898	1600	1078	2250	820	5.13	5750
2.4 TD 90 PS/115 PS	1602	3500	1898	1600	1065	2250	833	5.88	6000
2.4 TD 125 PS with Durashift EST auto	1593	3500	1907	1600	1084	2250	823	4.63	4750
2.4 TD 125 PS with Durashift EST auto	1593	3500	1907	1600	1084	2250	823	5.13	5250
2.4 TDCi 137 PS	1587	3500	1913	1600	1088	2250	825	3.77	5750
2.4 TDCi 137 PS	1587	3500	1913	1600	1088	2250	825	4.27	6000
2.3 Petrol 145 PS*	1602	3500	1898	1600	1065	2250	833	5.13	5500
350 MWB High Roof Van									
2.0 TD 100 PS/125 PS	1634	3500	1866	1665	1149	2250	717	4.54	4500
2.4 TD 90 PS/115 PS	1584	3500	1916	1600	1086	2250	830	4.63	4500/5000
2.4 TD 90 PS/115 PS	1584	3500	1916	1600	1086	2250	830	5.13	5750
2.4 TD 90 PS/115 PS	1584	3500	1916	1600	1071	2250	845	5.88	6000
2.4 TD 125 PS with Durashift EST auto	1575	3500	1925	1600	1092	2250	833	4.63	4750
2.4 TD 125 PS with Durashift EST auto	1575	3500	1925	1600	1092	2250	833	5.13	5250
2.4 TDCi 137 PS	1569	3500	1931	1600	1096	2250	835	3.77	5750
2.4 TDCi 137 PS	1569	3500	1931	1600	1096	2250	835	4.27	6000
2.3 Petrol 145 PS*	1584	3500	1916	1600	1086	2250	830	5.13	5500

MWB = Medium wheelbase. **Key: Payload** = Gross vehicle mass, less kerb mass. **GVM** = Gross vehicle mass. The total permissible all-up weight of a rigid vehicle - i.e. with body, payload, ancillaries, fuel, oil, water, driver and crew. **Kerb mass** = The weight of the complete vehicle and all equipment including fuel and water, but without payload, driver or any crew. **Plated mass** = The maximum weight allowed to be imposed on the axle (GVM must not be exceeded). **GTM** = Gross train mass. The total permissible all-up weight of a rigid vehicle (see GVM) together with its trailer and load. All kerb masses quoted in this brochure are subject to manufacturing tolerances and are for vehicles with minimum equipment. ***Please note** that where the LPG conversion is available as an option 85 kg must be added to the 2.3 petrol kerb mass and 85 kg DELETED from the payload. This calculation allows for the weight of the LPG tanks filled with 58 litres of LPG. Also the maximum permissible trailer weight for liquid alternative fuel vehicles is reduced by 15% in 'gas operation' mode.

Engine data

	Engine technical features	Maximum power[o]	Maximum torque[o]
2.0 Duratorq TDdi Diesel 63 kW (85 PS) 1998 cc	4 cylinders in line; DOHC; 16 valves; alloy cylinder head; direct injection with multipoint fuel injection system; turbocharger with intercooler; electronic throttle; catalytic converter	63 kW (85 PS) at 4000 min^{-1} (rpm)	230 Nm at 2000 min^{-1} (rpm)
2.0 Duratorq TDdi Diesel 74 kW (100 PS) 1998 cc	4 cylinders in line; DOHC; 16 valves; alloy cylinder head; direct injection with multipoint fuel injection system; turbocharger with intercooler; electronic throttle; catalytic converter	74 kW (100 PS) at 4000 min^{-1} (rpm)	250 Nm at 2000 min^{-1} (rpm)
2.0 Duratorq TDCi Diesel 92 kW (125 PS) 1998 cc	4 cylinders in line; DOHC; 16 valves; alloy cylinder head; direct injection with high-pressure, common-rail, multipoint fuel injection system; turbocharger with intercooler and transient torque overboost function; electronic throttle; dual-mass flywheel; catalytic converter	92 kW (125 PS) at 3800 min^{-1} (rpm)	285 Nm at 1500-2200 min^{-1} (rpm)
2.4 Duratorq TDdi Diesel 66 kW (90 PS) 2402 cc	4 cylinders in line; DOHC; 16 valves; alloy cylinder head; direct injection with multipoint fuel injection system; turbocharger with intercooler; electronic throttle; dual-mass flywheel; catalytic converter	66 kW (90 PS) at 4000 min^{-1} (rpm)	220 Nm at 1800 min^{-1} (rpm)
2.4 Duratorq TDdi Diesel 85 kW (115 PS) 2402 cc	4 cylinders in line; DOHC; 16 valves; alloy cylinder head; direct injection with multipoint fuel injection system; turbocharger with intercooler; electronic throttle; dual-mass flywheel; catalytic converter	85kW(115 PS) at 3800 min^{-1} (rpm)	285 Nm at 2300 min^{-1} (rpm)
2.4 Duratorq TDdi Diesel 92 kW (125 PS) (only available with Durashift EST) 2402 cc	4 cylinders in line; DOHC; 16 valves; alloy cylinder head; direct injection with multipoint fuel injection system; turbocharger with intercooler; electronic throttle; dual-mass flywheel; catalytic converter	92kW(125 PS) at 3800 min^{-1} (rpm)	285 Nm at 2300 min^{-1} (rpm)
2.4 Duratorq TDCi Diesel 101 kW (137 PS) 2402 cc	4 cylinders in line; DOHC; 16 valves; alloy cylinder head; direct injection with high-pressure, common-rail, multipoint fuel injection system; turbocharger with intercooler and transient torque overboost function; electronic throttle; dual-mass flywheel; catalytic converter	101 kW (137 PS) at 3500 min^{-1} (rpm)	375 Nm at 2000 min^{-1} (rpm)
2.3 Duratec Petrol 107 kW (145 PS) 2295 cc	4 cylinders in line; DOHC; 16 valves; electronic multipoint fuel injection; catalytic converter	107 kW (145 PS) at 5500 min^{-1} (rpm)	200 Nm at 2500 min^{-1} (rpm)
2.3 Duratec Petrol/LPG Bi-fuel 103 kW (141 PS) 2295 cc	4 cylinders in line; DOHC; 16 valves; electronic multipoint fuel injection; electronic gas injection system; fuel vaporiser/pressure regulator; dedicated ECU; catalytic converter	103 kW (141 PS) at 5300 min^{-1} (rpm)	185 Nm at 2500 min^{-1} (rpm)

All models are 5-speed manual transmission except for 137 PS diesel which is 6-speed manual and the 125 PS diesel which is fitted with Durashift automated shift manual transmission. [o]Tested in accordance with ISO 1585.

Mechanical features

	SWB	MWB	LWB/EF 'Jumbo'
Engine			
LPG/2.3 (141 PS) Petrol Bi-fuel engine (not available on 'Jumbo' models. Not available with Traction Assist brakes. Includes additional fuse panel SVO A526 as standard)	○	○	○/-
Road Speed Limiter (max. 70 mph) (diesel engines only) (not available on Durashift models)	○	○	○
Brakes			
Dual-circuit, with self-adjusting servo-assistance. Front discs and rear drums	●	●	●
Electronic anti-lock brakes (with electronic brake-force distribution)	●	●	●
Front brakes – Brake pad wear indicator	●	●	●
Fuel tank			
80 litres (plus 73 litres on LPG/Bi-fuel vehicles)*	●	●	●
Steering			
Power-assisted steering	●	●	●
Suspension			
Front, independent MacPherson struts, variable rate coil springs and gas-pressurised shock absorbers. Rear, leaf springs and gas-pressurised shock absorbers	●	●	●
Front – Anti-roll bar	●	●	●
Rear – Anti-roll bar (DRW models only) (includes DRW Jumbo)			●
Rear spring-ride height pack (front-wheel drive – 260 SWB, 280 SWB, 300 SWB, 260 MWB, 280 MWB, 300 MWB, 280LWB and 300 LWB) (rear-wheel drive – 300 SWB, 330 SWB) (fitted as standard on rear-wheel drive 300 MWB, 330 MWB, 350 MWB, 280 LWB, 300 LWB, 330 LWB, 350 LWB)	○	○	○
Transmission			
Durashift EST automated shift manual transmission (inc. Traction Assist) (only with 2.4 TDi 66 kW (90 PS) or 2.4 TDi 92 kW (125 PS) engines) – Gross Train Mass (GTM) is restricted with certain rear axle configurations – please consult your Ford Transit Specialist Dealer for details) (includes fitment of 6500 CD/radio with Keycode anti–theft coding) (Not available on Jumbo 350 DRW or 430 models)	○	○	○

Mechanical features

	SWB	MWB	LWB/EF 'Jumbo'
Axle ratios			
Final drive ratio – 3.77 (Rear-wheel drive models with 137 PS engine only)		●	●
Final drive ratio – 4.23 (Front-wheel drive vehicles only)	●	●	●
Final drive ratio – 4.27 (Rear-wheel drive models with 137 PS engine only)		●	●
Final drive ratio – 4.54 (Front-wheel drive vehicles only)	●	●	●
Final drive ratio – 4.63 (Rear-wheel drive vehicles only)	●	●	●
Final drive ratio – 5.13 (Rear-wheel drive vehicles only)	●	●	●
Final drive ratio – 5.88 (Rear-wheel drive vehicles only)		●	●
Turning circle			
Kerb to kerb – 10.8 m, wall to wall 11.4 m	●		
Kerb to kerb – 11.9 m, wall to wall 12.5 m		●	
Kerb to kerb – 13.3 m, wall to wall 14.3 m (wall to wall figures exclude 'Jumbo')			●

● = Standard, ○ = Option, at extra cost.
*Due to natural expansion of LPG, the usable capacity is 58 litres.

Safety and security

	SWB	MWB	LWB/EF 'Jumbo'
Safety			
Anti-lock brakes – Electronic (with electronic brake-force distribution) (mandates Traction Assist when specified with Durashift EST)	●	●	●
Traction Assist (includes anti-lock brakes) (not available on Petrol/LPG Bi-fuel, 350 DRW 'Jumbo' or 430 models) (standard on 260S, 280S and 280M (90 PS) Durashift and 125 PS/Durashift models) (Traction Assist is standard on all 2.0 TDCi (125 PS); 2.4 TDI (115 PS), 2.4 TDCi (137 PS) and 260/280/300 2.0 TDI (100 PS) powertrains)	○	○	○
Airbag – Driver	●	●	●
Airbag – Outer Front passenger	○	○	○
Exterior mirrors – Enhanced rear vision	●	●	●
Seat belts – 3-point lap and diagonal inertia reel with grabbers (all front seats)	●	●	●
Seat belts – Height-adjustable seat belt mount (driver only)	●	●	●
Security			
Audio – Keycode anti–theft coding	●	●	●
Audio – Removable control panel	●	●	●
Alarm – Perimeter	○	○	○
Doors – Unglazed rear	●	●	●
Fuel cap – Locking	●	●	●
Immobiliser – Safeguard Passive Anti-Theft System – (certified to Thatcham Category 2)	●	●	●
Locks – High security, lock-in-latch system, shielded with strengthened mountings	●	●	●
Locks – Remote keyless entry central, double locking	●	●	●
Locks – Key-operated bonnet release	●	●	●
Locks – 2nd remote control key fob	○	○	○
Steering wheel – Torque slip, anti-theft	●	●	●
Vehicle Identification Number – Visible	●	●	●

● = Standard, ○ = Option, at extra cost.

Exterior features

	SWB	MWB	LWB/EF 'Jumbo'
Exterior appearance and styling			
Body – Low roof	●		
Body – Medium roof (not 350/430 LWB EF 'Jumbo' model) (includes header-mounted package tray)	○	●	●
Body – High roof (330/350 MWB, 330/350 LWB and 350/430 LWB EF 'Jumbo') (includes header-mounted package tray)		●	●
Body – High roof (260/280/300 MWB and 280/300 LWB) (includes header-mounted package tray)		○	○
Bodyside mouldings (not available on 350/430 LWB EF 'Jumbo')	○	○	○
Bumpers – Full width, front and rear	●	●	●
Rear wheel arch mouldings (350 DRW/430 LWB EF 'Jumbo' only)			●
Paint – Metallic (No charge option when ordered with Executive Pack)	○	○	○
Tyres – Goodyear (Mud and snow)	○	○	○
Tyres – Michelin (All-weather)	○	○	○
Wheels – 5½x15" steel wheels with centre hub covers and 195/70R 15C tyres (front-wheel drive vehicles only)	●	●	●
Wheels – 5½x16" steel wheels with centre hub covers and 175/75R 16C tyres (rear-wheel drive only) (260 SWB Petrol/LPG and 90 PS Durashift models)	●		
Wheels – 5½x16" steel wheels with centre hub covers and 185/75R 16C tyres (rear-wheel drive only) (All 280 SWB, 280 MWB with Petrol/LPG or 90 PS Durashift engines, and 280 LWB RWD Diesel engines and Petrol/LPG)	●	●	●
Wheels – 5½x16" steel wheels with centre hub covers and 215/75R 16C tyres (rear-wheel drive only)	●	●	●
Wheels – 5½x16" steel wheels with centre hub covers and 215/75R 16C tyres (front-wheel drive 330 SWB, 330 MWB, 330 LWB, 350 MWB, 350 LWB Vans)	●	●	●
Wheels – 5½x16" steel wheels with centre hub covers and 205/75R 16C tyres (rear-wheel drive Petrol models 300 SWB, 300 MWB, 300 LWB)	●	●	●
Wheels – Partial wheelcovers ('Jumbo' – single rear wheel models only) (front covers are standard on dual rear wheel models)	○	○	○
Exterior functional			
Doors – With drop window and winder handle	●	●	●
Doors – Left-hand sliding side load door (low/narrow) (a step is only fitted to the RWD 260 and 280 SWB Petrol/LPG and 90 PS Durashift, and 300 SWB Petrol and 330 SWB – Petrol and 2.4 diesel engines)	●		
Doors – Left-hand sliding side load door (high/wide) (a step is only fitted to a RWD 280 MWB Petrol/ LPG and 90 PS/Durashift, 280 LWB – Petrol and 2.4 diesel engines, 300 MWB/LWB Petrol, 330 MWB/LWB – Petrol and 2.4 diesel engines, 350 MWB/LWB – Petrol and 2.4 diesel engines, 350/430 LWB EF 'Jumbo' – all engines)		●	●
Doors – Right-hand sliding side load door (low/narrow) (a step is only fitted to the RWD 260 and 280 SWB Petrol/LPG and 90 PS/Durashift and 300 SWB Petrol and 330 SWB – Petrol and 2.4 diesel engines)	○		
Doors – Right-hand sliding side load door (high/wide) (a step is only fitted to a RWD 280 MWB Petrol/LPG and 90 PS/Durashift, 280 LWB – Petrol and 2.4 diesel engines, 300 MWB/LWB Petrol, 330 MWB/ LWB – Petrol and 2.4 diesel engines, 350 MWB/LWB – Petrol and 2.4 diesel engines, 350/430 LWB EF 'Jumbo' – all engines)		○	○
Doors – Delete left-hand side sliding door (not available when right-hand sliding side door is specified)	○	○	○
Doors – Unglazed hinged rear doors, 180° opening, positive stop at 90°	●	●	●/–
Doors – Unglazed hinged twin rear doors, 256° foldback facility, Standard on 'Jumbo' models (includes bodyside mouldings except on 'Jumbo' models) (not available with rear wipers)	○	○	○/●
Doors – Glazed rear doors (includes rear-view mirror) 180° opening, (256° on 'Jumbo') positive stop at 90°	○	○	○/○
Tailgate – Rear tailgate (in lieu of rear doors) (includes heated rear window) (No charge option when ordered with LX Pack on SWB low roof models)	○		
Exterior mirrors – Power-operated and heated	○	○	○
Mudflaps – Front	○	○	○
Mudflaps – Rear	○	○	○
Rear step (standard on High Roof models)	○	○	○
Rear step – Integrated in bumper (not available with optional tow bar)	○	○	○
Rear parking distance sensor (includes integrated bumper step and power heated mirrors) (not available with optional tow bar or rear centre step)	○	○	○
Towing eyes – Front and rear	●	●	●
Tow bar (not available with optional integrated bumper step, rear centre step or rear parking distance sensor) with 13-pin electrics (tachograph may be required, dependent on model)*	○	○	○

Exterior features

	SWB	MWB	LWB/EF 'Jumbo'
Windows – Front, power-operated	○	○	○
Windows – Heated Rear (no charge option when ordered with LX Pack on SWB low roof models)	○	○	○
Windows – 2nd row, right-hand side, fixed (only with optional right-hand side door on Vans) (not available on 260 SWB)	○	○	○
Windows – 2nd row, right-hand side, sliding (only with optional right-hand side door on Vans) (not available on 260 SWB)	○	○	○
Windows – 2nd row, left-hand side, fixed (only with left-hand side door on Vans) (not available on 260 SWB)	○	○	○
Windows – 2nd row, left-hand side, sliding (only with left-hand side door on Vans) (not available SWB vans)		○	○
Glass – Light tint windscreen/front passenger glass	○	○	○
Windscreen – Laminated	●	●	●
Windscreen – 'Quickclear' heated	○	○	○
Wipers – Front, two-speed with electric wash	●	●	●
Wipers – Twin rear, with electric wash (includes heated rear windows) (not available on 'Jumbo' models) (not available with optional 256° foldback facility on twin rear doors) (No charge option when ordered with LX Pack on SWB low roof models)	○	○	○/–
Wipers – Tailgate, with electric wash (includes high-mounted rear brake light) (No charge option when ordered with LX Pack on SWB low roof models)	○		
Exterior lighting			
Halogen headlights, side lights, rear fog lights, reversing lights	●	●	●
Front fog lights	○	○	○
Headlight levelling	●	●	●
High-mounted rear brake light (only with glazed rear doors/tailgate) (includes wash/wipe facility when specified with optional tailgate) (No charge option when ordered with LX Pack on SWB low roof models)	○	○	○
Side marker lights (350/430 LWB EF 'Jumbo' only)			●

● = Standard, ○ = Option, at extra cost.
*__Tachograph__ When a vehicle is fitted with a trailer towing attachment, it is recommended that a tachograph is fitted, since the ability to tow a trailer giving a GTM of over 3500 kg without a tachograph could be considered to be contrary to EU and UK road traffic law.

Interior features

	SWB	MWB	LWB/EF 'Jumbo'
Audio			
Stereo radio/cassette – Model 4000 RDS, 'Keycode' anti-theft coding, removable control panel, 2 speakers	●	●	●
Stereo radio/CD – Model 6000 RDS, 'Keycode' anti-theft coding, removable control panel, 2 speakers	○	○	○
Carpet and trim			
Cab floor mat, rubber	●	●	●
Cab headlining – Moulded	●	●	●
Door trim – Front, moulded with pull handles and storage pockets	●	●	●
Headlining – Moulded full length (not available with High Roof or on SWB models with bulkheads (except half horizontal steel)	○	○	○
Interior lighting			
Courtesy lights – Header-mounted, front door-operated	●	●	●
Load/Passenger area light(s)	●	●	●
Instruments and controls			
Battery – Twin	○	○	○
Cold start (Thermostart for -20°C starting)	●	●	●
Control stalks – Column-mounted for indicators and wash/wipe functions	●	●	●
Illuminated heater controls – 3-speed fan. Four vents with temperature and direction control, two dedicated side window demisters	●	●	●
Instruments – Speedometer, tachometer, odometer, fuel gauge, water temperature gauge, trip recorder	●	●	●
Tachograph – Electronic, 24-hour (mandatory option for 430 models)*	○	○	○
Warning lights for oil pressure, direction indicator, main beam, lights on, ignition/alternator, brake failure, ABS, airbag(s), glow plugs, oil change, low fuel, traction control (where fitted)	●	●	●
Seats			
Seat trim – Fabric	●	●	●
Seat trim – Vinyl	○	○	○
Front row – Fabric trim; driver's 6-way manual adjustment with armrests; dual fixed passengers' seat; height-adjustable head restraints	●	●	●
Front row – Fabric trim; driver's 6-way and single passenger's 4-way manual adjustment with armrests; height-adjustable head restraints	○	○	○
Front row – Fabric trim; driver's heated, 8-way manual adjustment with armrests; dual fixed passengers' seat; height-adjustable head restraints	○	○	○
Front row – Vinyl trim; driver's 6-way manual adjustment; dual fixed passengers seat; height-adjustable head restraints	○	○	○
Seat belts – Height-adjustable mount, driver's side	●	●	●
Comfort and convenience			
Accessory socket 12V	○	○	○
Air conditioning – Front, CFC-free (includes tinted glass)	○	○	○
Clock – Digital	●	●	●
Cup holder – Twin, facia-mounted, drop-down	●	●	●
Glovebox – With lid	●	●	●
Heater – Recirculation	●	●	●
Storage – Front door pockets	●	●	●
Storage – Facia-mounted on passengers side, with cup holder	●	●	●
Storage – Centre facia-mounted document holder, with integral cover	●	●	●
Storage – Facia-mounted stowage slot	●	●	●
Header-mounted package tray (only with Medium and High Roof models)	●	●	●
Sunvisors – Two, swivelling	●	●	●
Load compartment			
Bulkhead – Full-width steel (only available with unglazed rear doors)	○	○	○
Bulkhead – Full-width steel with window	○	○	○
Bulkhead – Half horizontal, steel	○	○	○
Bulkhead – Vertical, Half-width mesh (no charge option if ordered with LX Pack)	○	○	○
Bulkhead – L-shaped Vertical mesh/Half horizontal steel	○	○	○
Load compartment board trim	○	○	○
Load area protection kit (includes full-length bonded rubber mat and heavy-duty trim boards) (Not available with LPG Bi-fuel vehicles or 'Jumbo' models)	○	○	○/–
Rubber mat – Full-length, bonded	○	○	○
Tie-down loops – Floor-mounted	●	●	●
Cargo stowage rail – Side panel-mounted (not available with SVO option D1 – Double Cab-in-Van)	○	○	○

Interior features

	SWB	MWB	LWB/EF 'Jumbo'
Option Packs			
LX Pack – Stereo radio/CD model 6000 RDS; power-operated and heated exterior mirrors; power-operated front windows; front fog lights; partial wheelcovers; tinted glass; 'Quickclear' heated windscreen; second key fob; metallic paint	○	○	○
Courier Pack – Full-width unglazed steel bulkhead; load area protection kit (includes full-length bonded rubber mat and heavy-duty trim boards);(standard trim boards + rubber mat only on 'Jumbo' models) cargo stowage rails; and integrated rear bumper step	○	○	○
Security Pack – Perimeter alarm; full-width unglazed bulkhead; power-operated and heated door mirrors; rear parking distance sensor	○	○	○
Air Pack – Front, CFC-free air conditioning: tinted glass; and full-width unglazed bulkhead	○	○	○
LX and Air Pack – descriptions as above	○	○	○
LX and Courier Pack – descriptions as above	○	○	○
LX and Security Pack – descriptions as above	○	○	○
Air and Security Pack – descriptions as above	○	○	○
Smokers' Pack – Cigar lighter and ashtray	○	○	○

● = Standard, ○ = Option, at extra cost.
***Tachograph** When a vehicle is fitted with a trailer towing attachment, it is recommended that a tachograph is fitted, since the ability to tow a trailer giving a GTM of over 3500 kg without a tachograph could be considered to be contrary to EU and UK road traffic law.

For more information

To find the location of your nearest Ford Transit Specialist Dealer, simply call the Ford Information Service on **0845 7111 888**, or visit the Ford Dealer locator at **www.fordvans.co.uk**